# TLD2252-2_RCL_S00_Top_Level.SchDoc

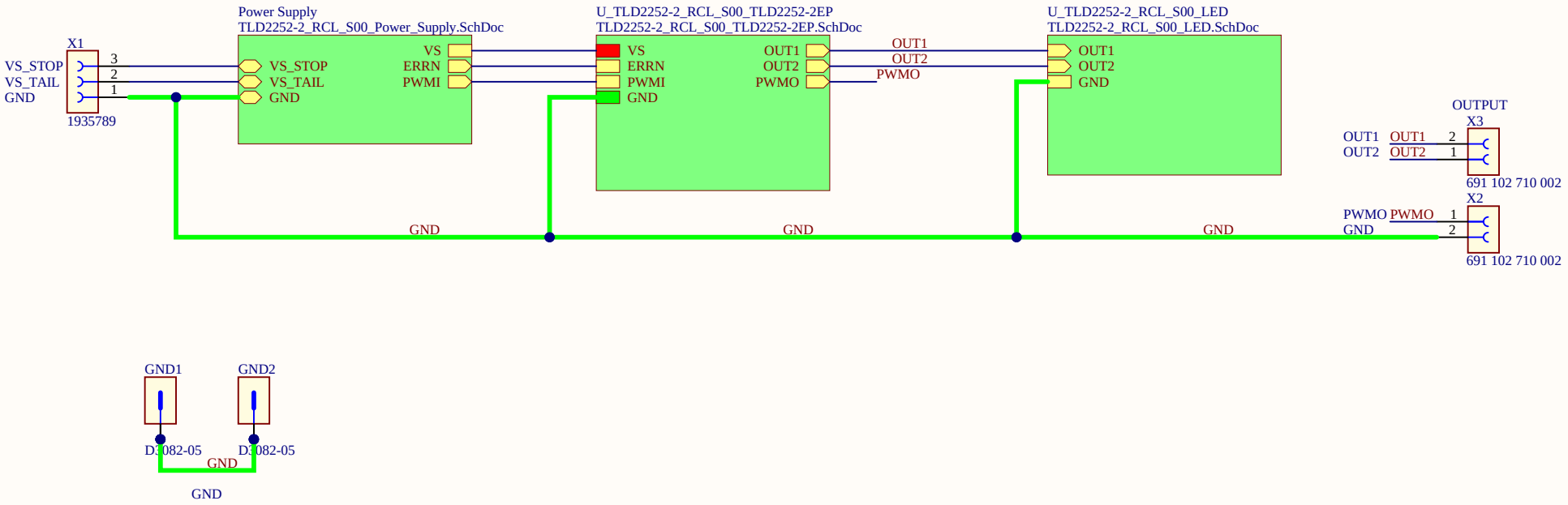


REL
Confidential


**Infineon Technologies AG**
**IFAT DC ATV BP ASE SEV**
Siemensstraße 2, 9500 Villach


| | | | |
|---|---|---|---|
| Title | TLD2252-2_RCL_EVAL | | |
| Variant | Default_Assembly | Approved | <Appr.> |
| Size: A4 | Document Name: TLD2252-2_RCL_S00_Top_Level.SchDoc | Rel.: REL | Rev.: V1.0 |

Author: Makantasi Vasiliki
Date: 22/7/2020 Time: 10:58:48 AM SVN Revision: Not in version control

© Infineon Technologies AG 2020. All Rights Reserved.

# TLD2252-2_RCL_S00_TLD2252-2EP.SchDoc

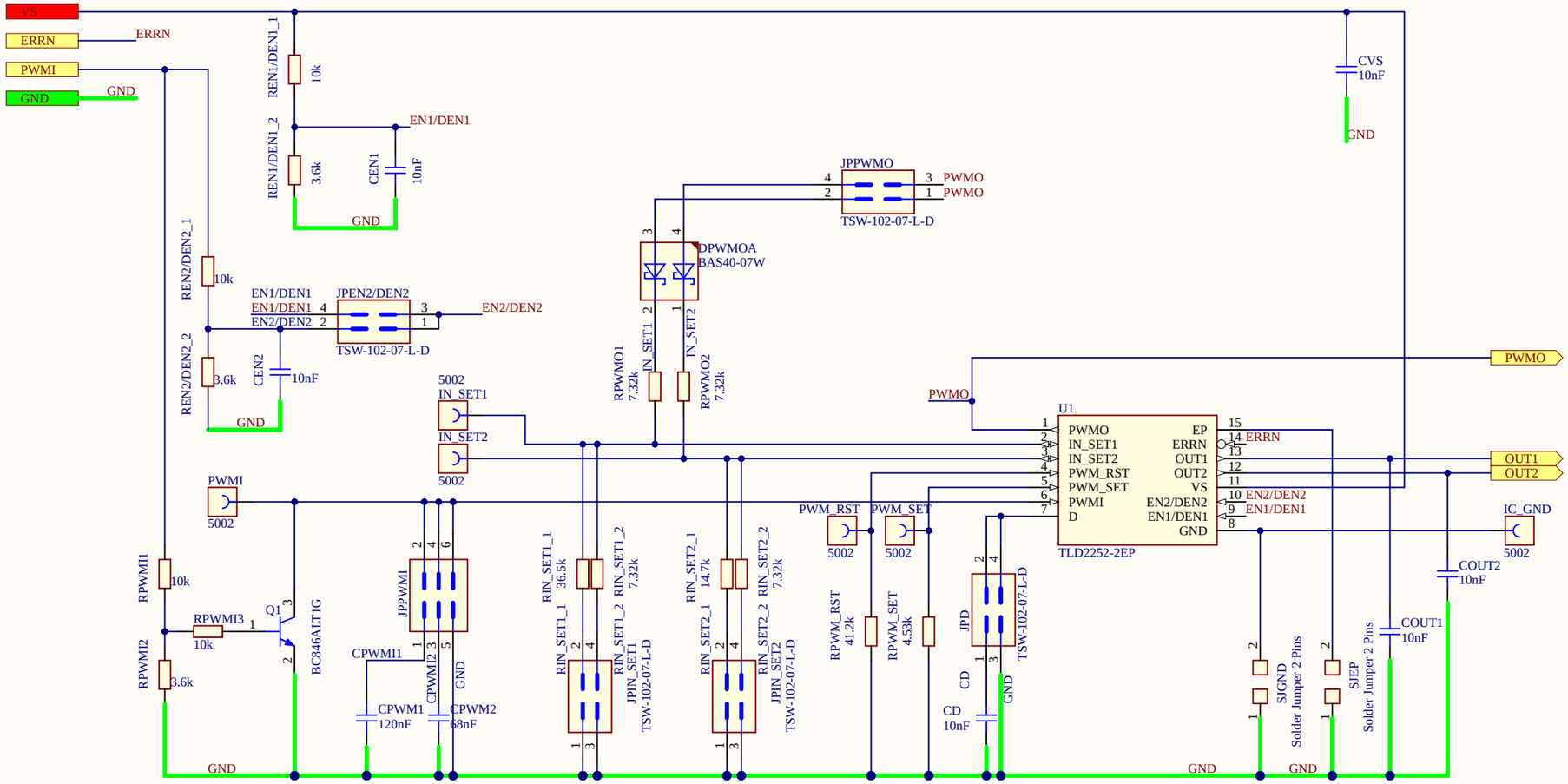


**REL**
**Confidential**

| | | | |
|---|---|---|---|
| **Infineon Technologies AG**<br>**IFAT DC ATV BP ASE SEV**<br>Siemensstraße 2, 9500 Villach | | | |
| Title | TLD2252-2_RCL_EVAL | | |
| Variant | Default_Assembly | Approved | <Appr.> |
| Size: A3 | Document Name: TLD2252-2_RCL_S00_TLD2252-2EP.SchDoc | Rel.: REL | Rev.: V1.0 |
| Author: Makantasi Vasiliki | | | |
| Date: 22/7/2020 Time: 10:58:48 AM | SVN Revision: Not in version control | | |
| © Infineon Technologies AG 2020. All Rights Reserved. | Sheet 3 of 4 | | |

# TLD2252-2_RCL_S00_Power_Supply.SchDoc

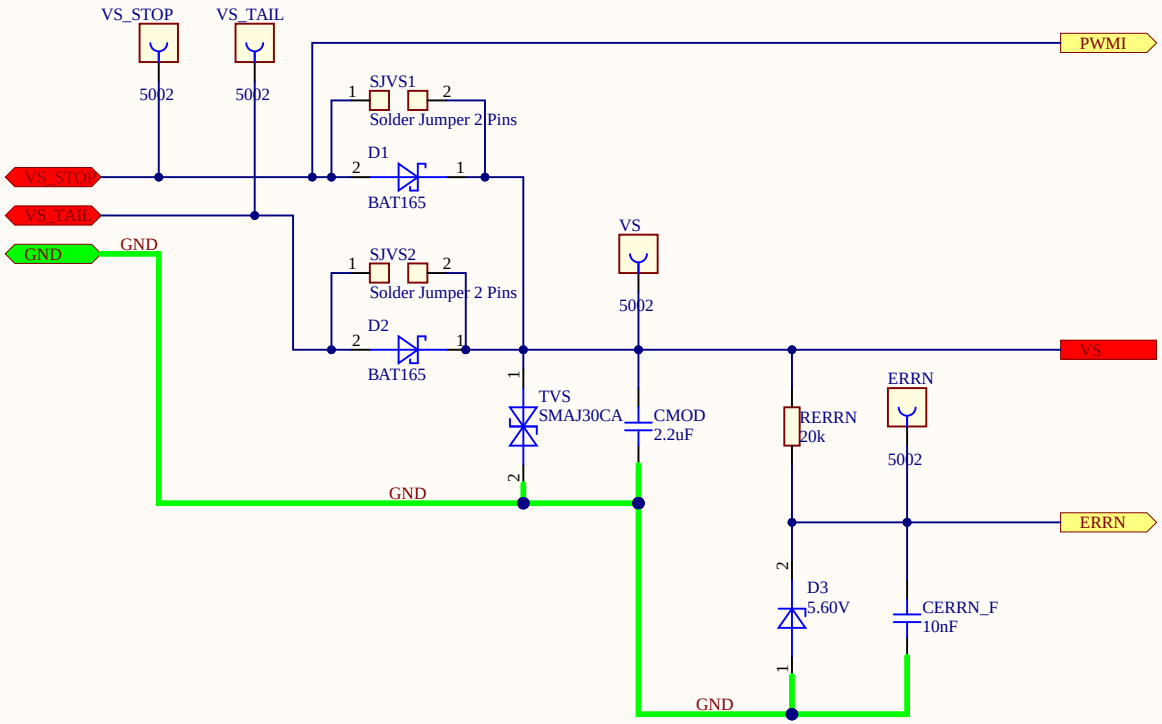


**REL**
**Confidential**


**Infineon Technologies AG**
**IFAT DC ATV BP ASE SEV**
Siemensstraße 2, 9500 Villach


| | | | |
|---|---|---|---|
| Title | TLD2252-2_RCL_EVAL | | |
| Variant | Default_Assembly | Approved | <Appr.> |
| Size: A4 | Document Name: TLD2252-2_RCL_S00_Power_Supply.SchDoc | Rel.: REL | Rev.: V1.0 |

Author: Makantasi Vasiliki
Date: 22/7/2020 Time: 10:58:48 AM SVN Revision: Not in version control

© Infineon Technologies AG 2020. All Rights Reserved.

# TLD2252-2_RCL_S00_LED.SchDoc

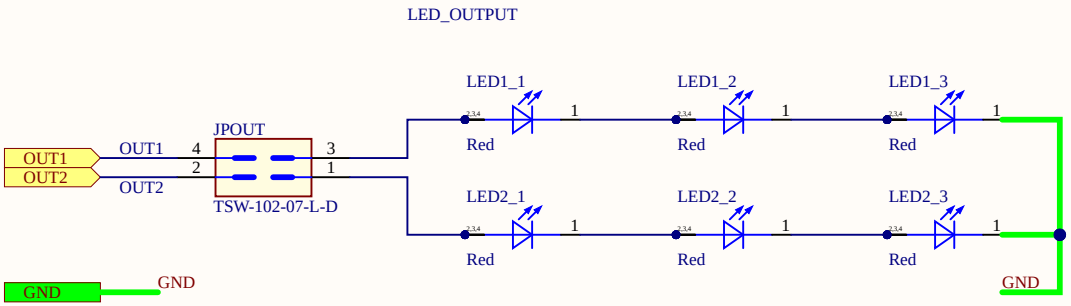


**REL**
**Confidential**


**Infineon Technologies AG**
**IFAT DC ATV BP ASE SEV**
Siemensstraße 2, 9500 Villach


| | | | |
|---|---|---|---|
| Title | TLD2252-2_RCL_EVAL | | |
| Variant | Default_Assembly | Approved | <Appr.> |
| Size: A4 | Document Name: TLD2252-2_RCL_S00_LED.SchDoc | Rel.: REL | Rev.: V1.0 |

Author: Makantasi Vasiliki
Date: 22/7/2020 Time: 10:58:49 AM SVN Revision: Not in version control
© Infineon Technologies AG 2020. All Rights Reserved.